Prestige PCX 160 Specifications

- **Large American style bowl format**
- **Overflow in main bowl**
- **2 x 90mm Wastes with Basket Strainer Wastes.** Capable of adaptation to take Waste Disposal Unit
- **Large half Bowl**

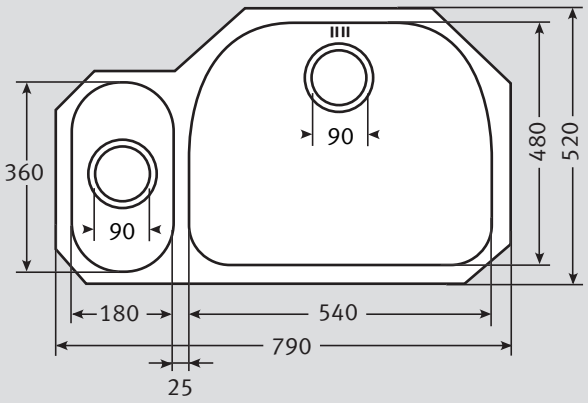

Material:	Stainless Steel
Application:	Undermounted
Bowl Size:	540 x 480 x 185 180 x 360 x 140
Drainer Format:	N/A
Cut-out Size:	Utilise template *Standard template cut-out for sink is oversized providing flange reveal.
Colour:	Silk Stainless Steel
Seal:	Apply sealant locally
Insulation:	Grey Dynaphon for heat and sound
Heat Resistance:	Up to 300°C
Earthing Point:	Supplied with sink

Cabinet Size:

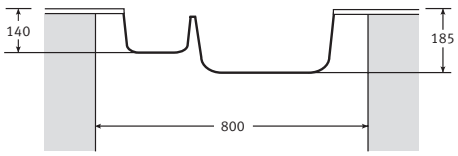

Fixing Clips: Provided

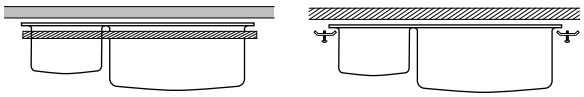

Alternative fixing systems

Suggested Plumbing Kit: 2 part

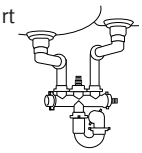

Waste: 1 x Lira 90mm Basket Strainer Waste with Overflow

1 x Lira Basket Strainer Waste

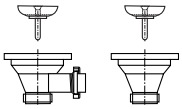

Overflow:

Accessories: None available

Taps: Any Franke tap can be utilised with this model*.

*Ceramic disc taps in certain installations or where there is a low head of water (below 4 metres) may not provide adequate flow rates. You are advised to check with your supplier.

Guarantee: Franke sinks are guaranteed for 25 years against manufacturing defect. Franke taps are guaranteed against defective materials and workmanship for 1 year in relation to coatings and finishes, and 5 years in relation to moving parts. Franke will replace (and where appropriate repair) defective sinks. In relation to taps, Franke will where appropriate provide replacement parts for your taps or replace your taps. Any associated or ancillary costs to be incurred by you as a result of replacement of Franke sinks and taps under this guarantee shall in all cases be previously approved by Franke UK Limited.

This guarantee is in addition to and does not affect your statutory rights.

The Franke policy is one of continued improvement, and Franke reserve the right to alter models and specifications without notice.